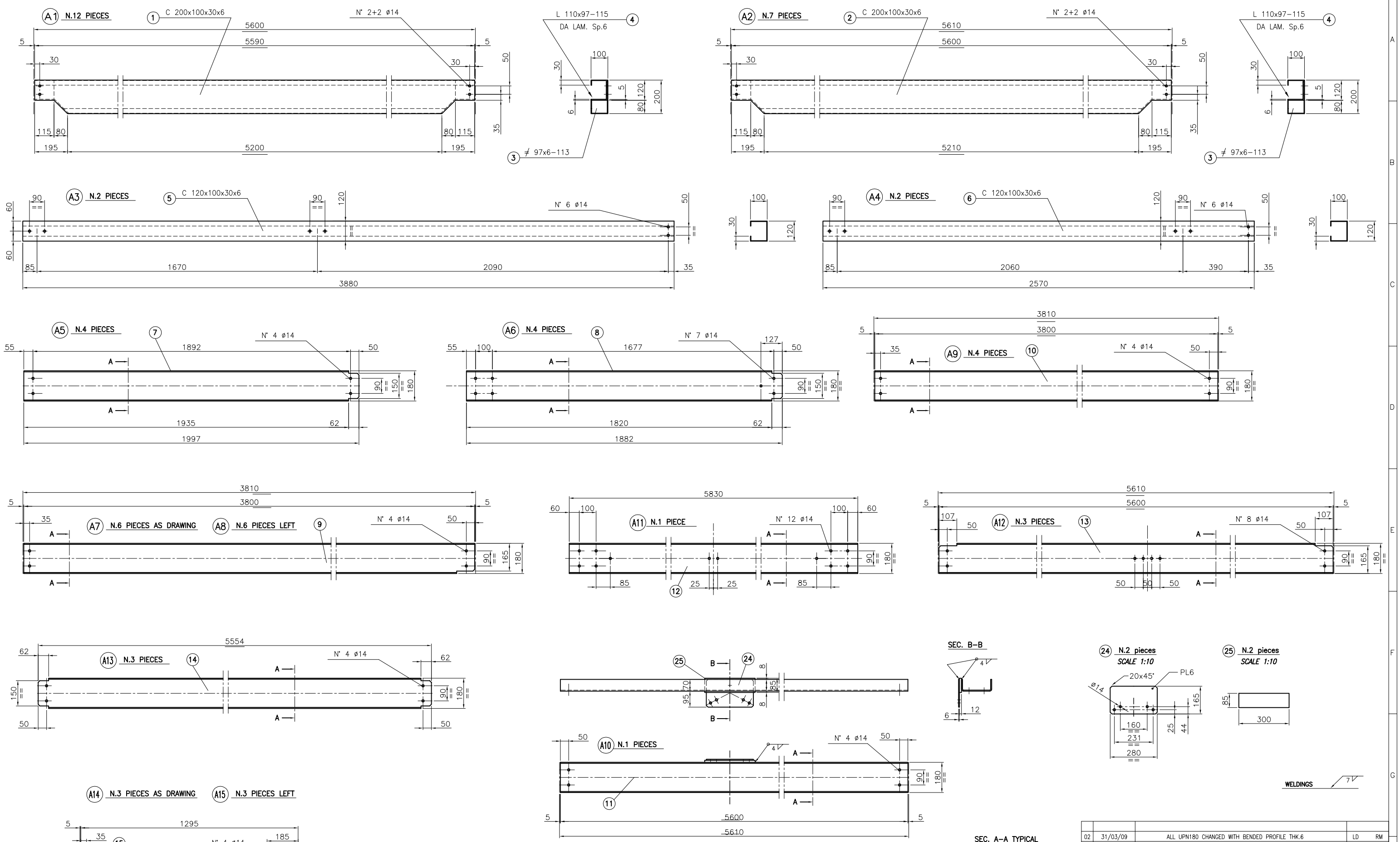

02	31/03/09	ALL UPN180 CHANGED WITH BENDED PROFILE THK.6		LD	RM
01	06/03/09	GENERAL REVISION		TM	RM
00	11/02/09	FIRST ISSUE		TM	RM
DATA DATE		MODIFICA ESEGUITA O MOTIVO DELLA SOSTITUZ. MODIFICATION EXECUTED OR REASON OF THE REPLACEMENT		DIS. DRAWER	APP.

Fabb. di riferimento N. Ref. material list	Materiale Material	Trattamento Treatment	Toll. gen. lav. Mach tolerance	Mod. o stampo Type	Peso Weight Kg	Scala Scale
12834-5203	See Material List	–	–	–	5326	1:10

MGM OMG

ROKAS CONSTRUCTIONS S.A.
TEL. +30-2106777420
FAX. +30-2106777425, or 333 WWW.ROKASGROUP.GR

Customer: PIRAEUS PORT AUTHORITY
Object: N.8 RMG 40t
Project: F0010

DIS. DRAWER	TM	
VER.	DB	DATA DATE
APP.	RM	11/02/09

PIRAEUS PORT AUTHORITY
N.8 RMG 40t SPAN 42500
PURLINS

Dis. di riferimento N. Ref. Drawing: 12834-5200 | Pos. 3 | 00 01 02
Comm. /Job: N. 18033
Disegno / Drawing: N. 12834-5203 | 1/2
Formato: A1