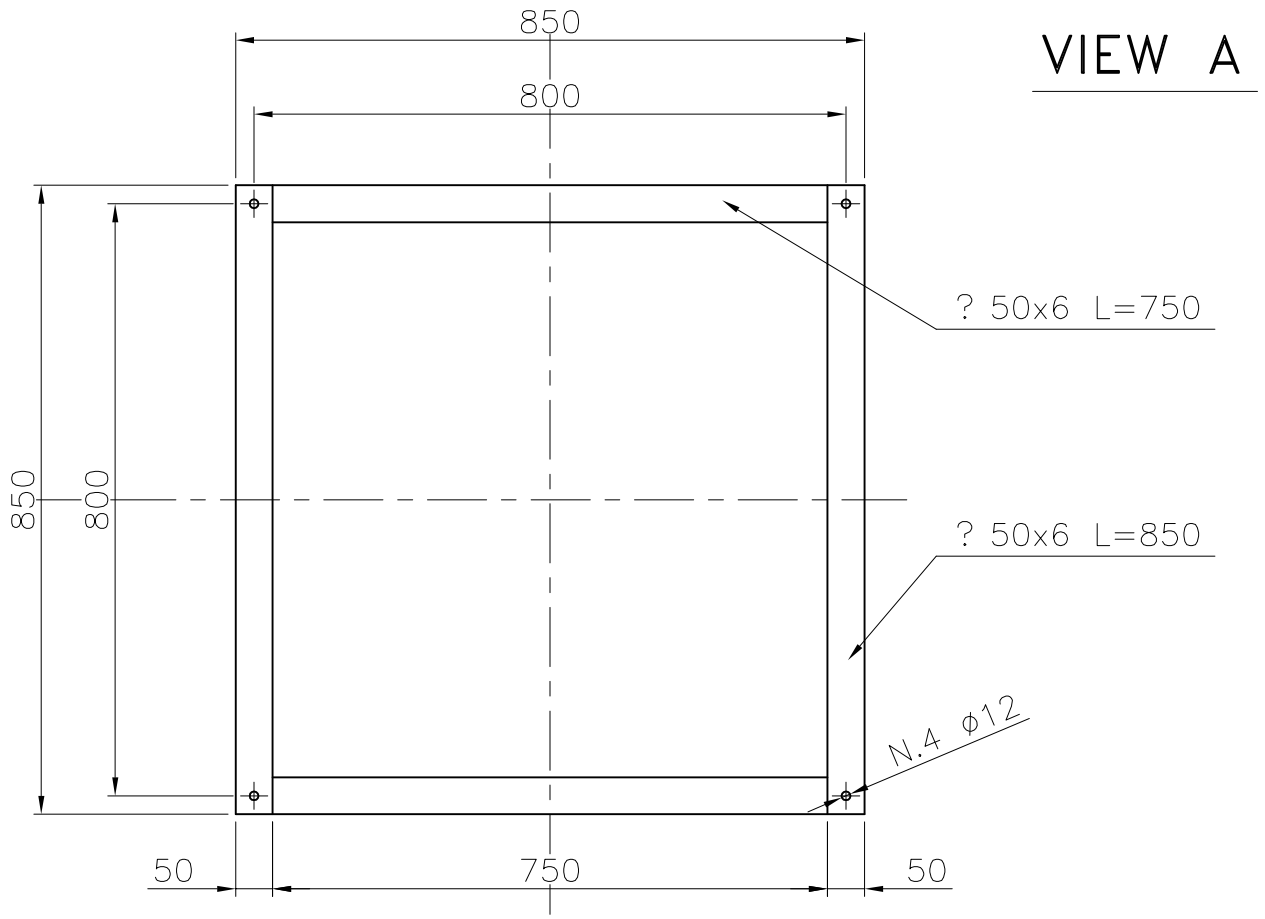

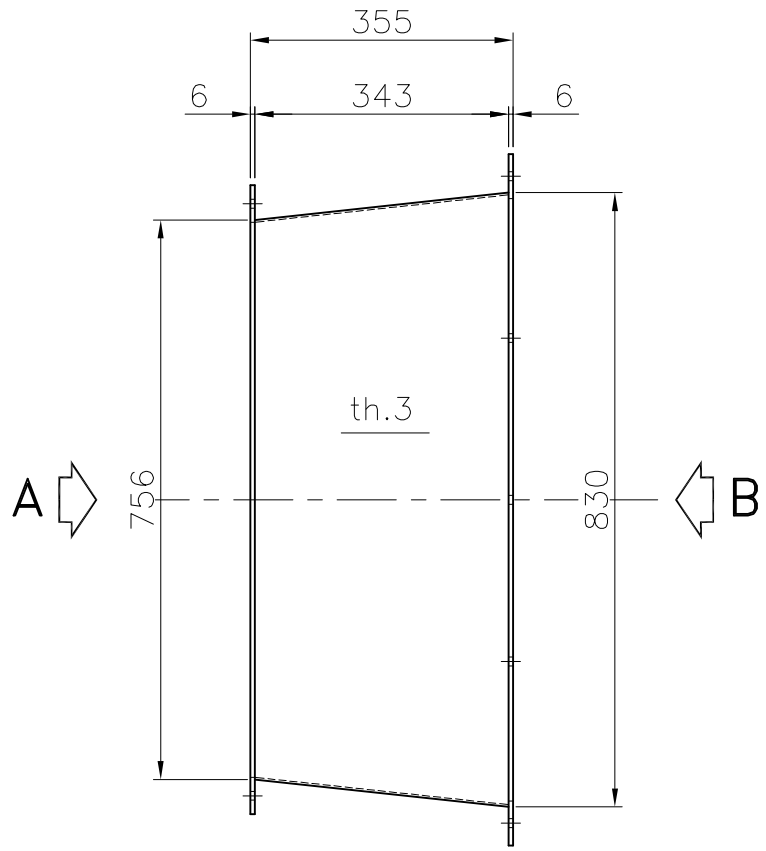

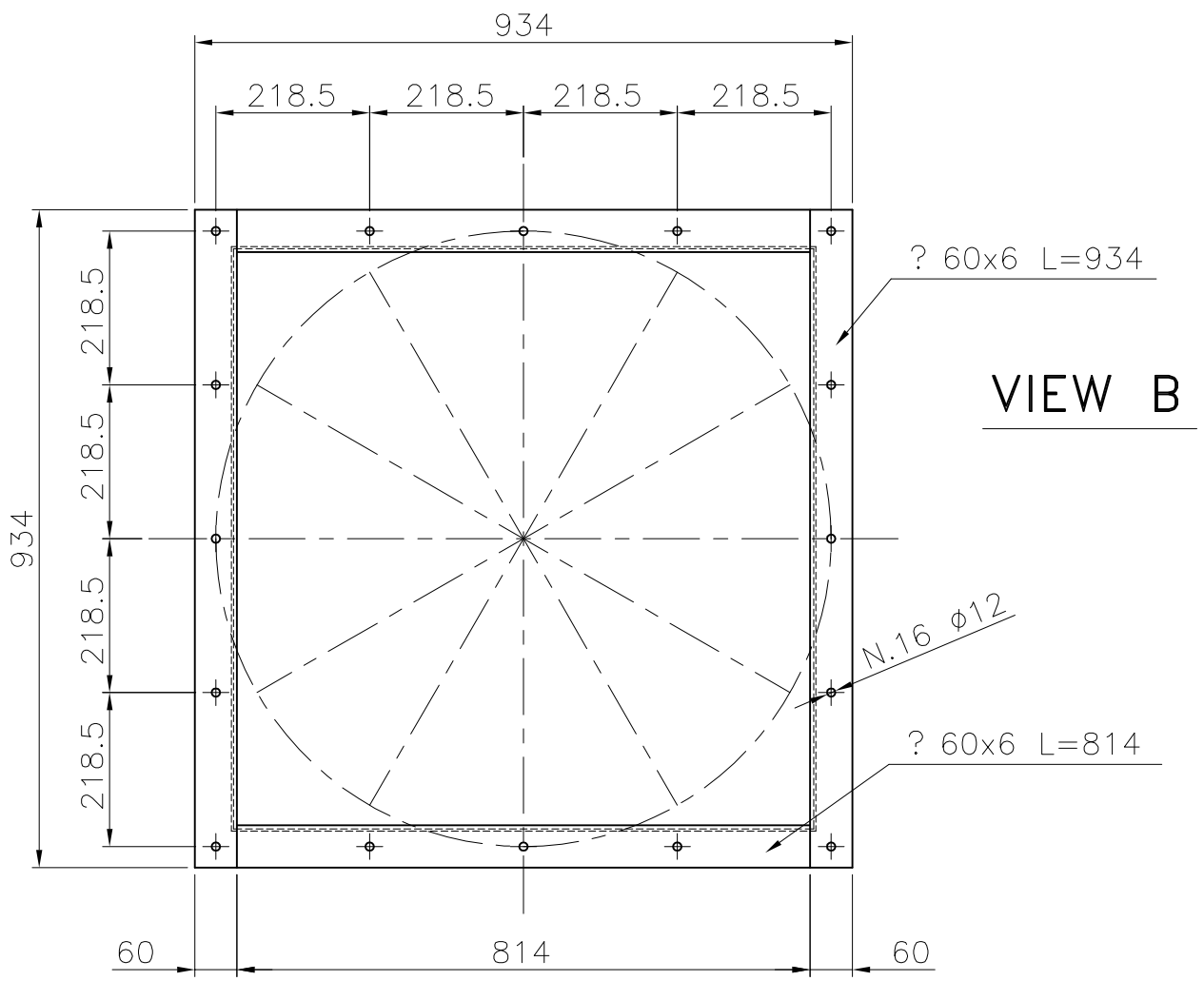

00	06/03/09	FIRST ISSUE				TM	RM
	DATA DATE	MODIFICA ESEGUITA O MOTIVO DELLA SOSTITUZ. MODIFICATION EXECUTED OR REASON OF THE REPLACEMENT				DIS. DRAWER	APP.
Fabb. di riferimento N. Ref. material list	Materiale Material	Trattamento Treatment	Toll. gen. lav. Mach tolerance	Mod. o stampo Type	Peso Weight Kg	Scala Scale	
–	See material list				28	1:10	

MGM OMG

ROKAS CONSTRUCTIONS S.A.
TEL. +30-2108774100
FAX +30-2108774121 or 111
WWW.ROKASGROUP.GR

Customer: *PIRAEUS PORT AUTHORITY*
Object: N.8 RMG 40t
Project: F0010

DIS. DRAWER	TM	
VER.	DB	DATA DATE
APP.	RM	06/03/09

PIRAEUS PORT AUTHORITY
N.8 RMG 40t SPAN 42500
VENTILATING FAN ADAPTER

Dis. di riferimento N. Ref. Drawing: 12834-5210
Pos. 3
00
Comm. /Job: N. 18033
Disegno / Drawing: N. 12834-5213
1/1

Formato: A3