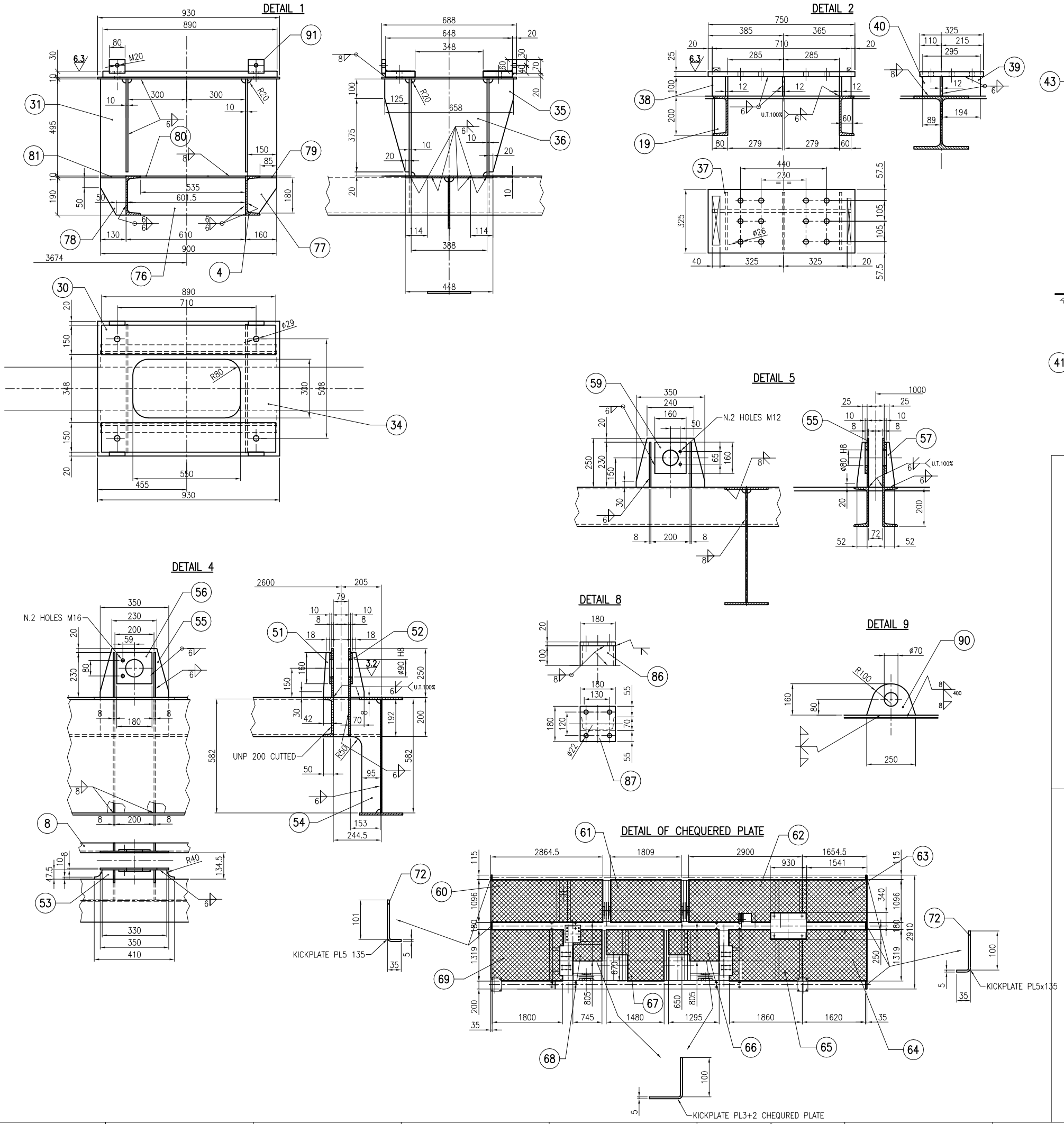

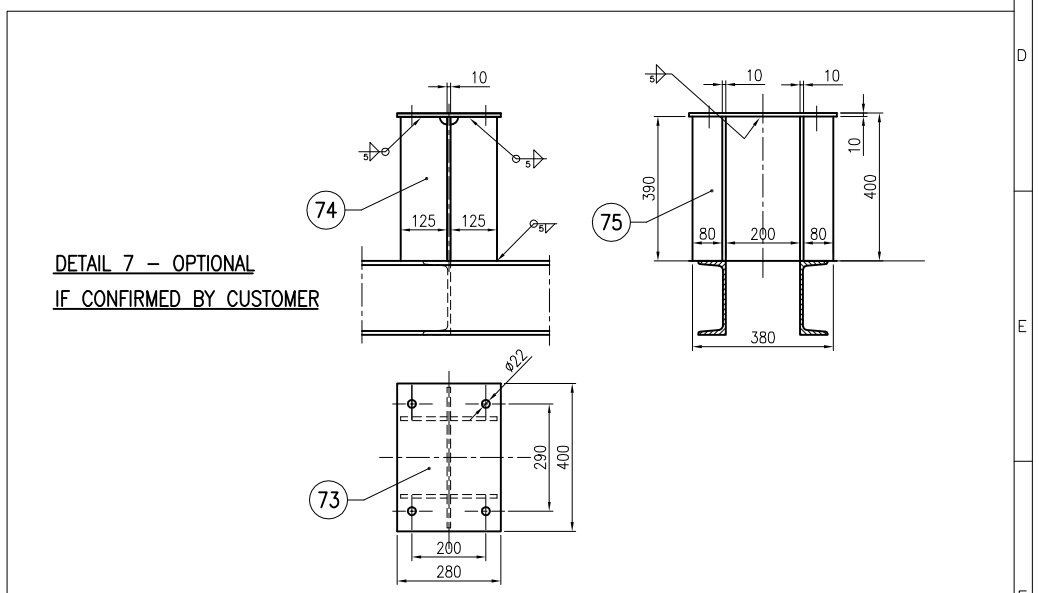

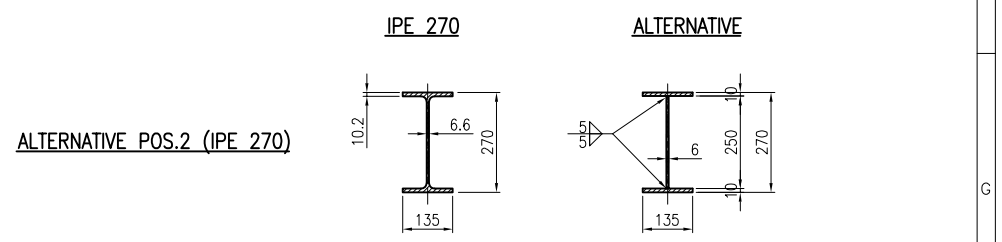

04	04/06/09	ADDED POS.91	GF	RM
03	11/05/09	ADDED EYEBOLTS DETAIL 9	GM	RM
02	31/03/09	GENERAL REVISION	VS	RM
01	31/03/09	GENERAL REVISION	GM	RM
	DATA DATE	MODIFICA ESEGUITA O MOTIVO DELLA SOSTITUZ. / MODIFICATION EXECUTED OR REASON OF THE REPLACEMENT	DIS. DRAWER	APP.

Fabb. di riferimento N. / Ref. material list	Materiale / Material	Trattamento / Treatment	Toll. gen. lav. / Mach tolerance	Mod. o stampo / Type	Peso / Weight kg	Scala / Scale
12834–5105	SEE M.L.		H11–d11			1:10

MGM OMG

ROKAS CONSTRUCTIONS S.A.
TEL. +30-6986774486
FAX: +30-6986774486 or 111
WWW.ROKASGROUP.GR

Customer: PIRAEUS PORT AUTHORITY
Object: N.8 RMG 40t
Project: F0010

DIS. DRAWER: GM
VER.: DB — DATA DATE
APP.: RM — 30/01/09

TROLLEY FRAME B5

Dis. di riferimento N. / Ref. Drawing: 12834–5100 — Pos. 5
Comm. /Job: N. 18033
Disegno / Drawing: N. 12834–5105 — 2/2
01 02 03 04

Formato: A1