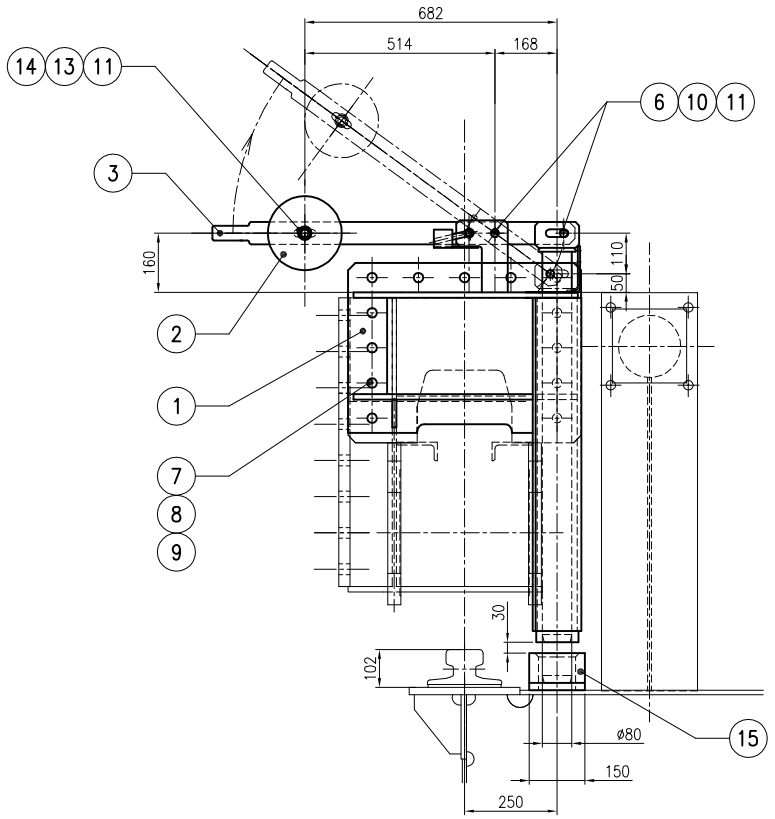

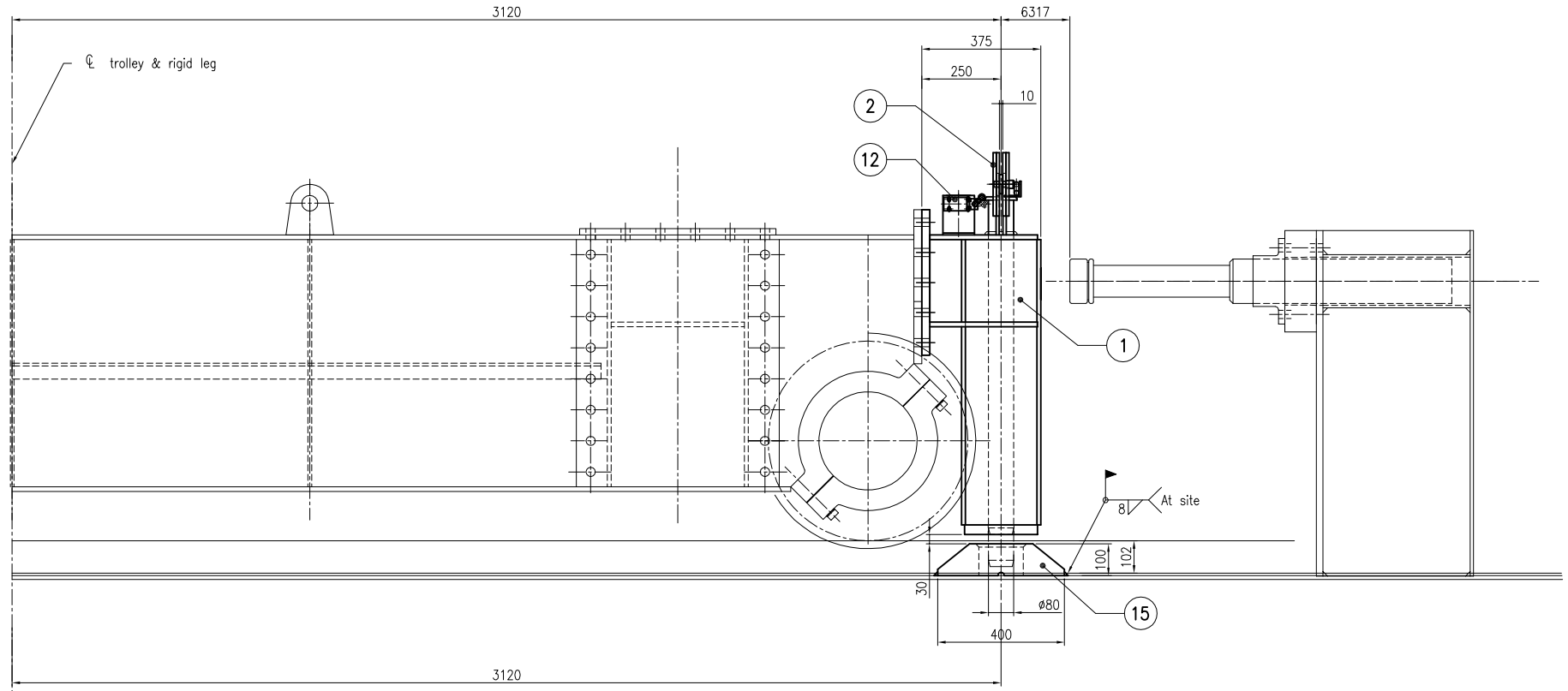

KEY PLAN

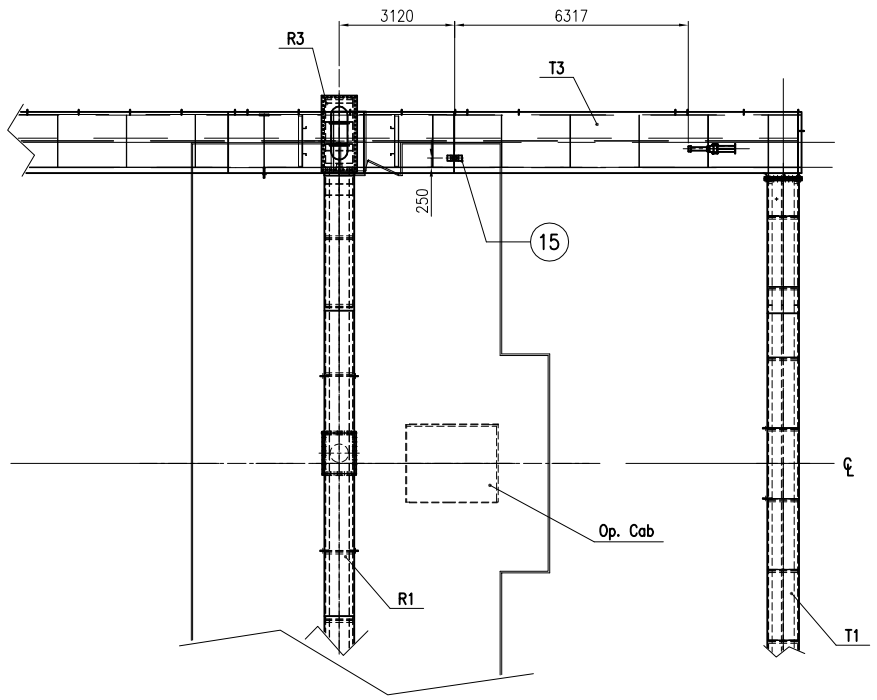

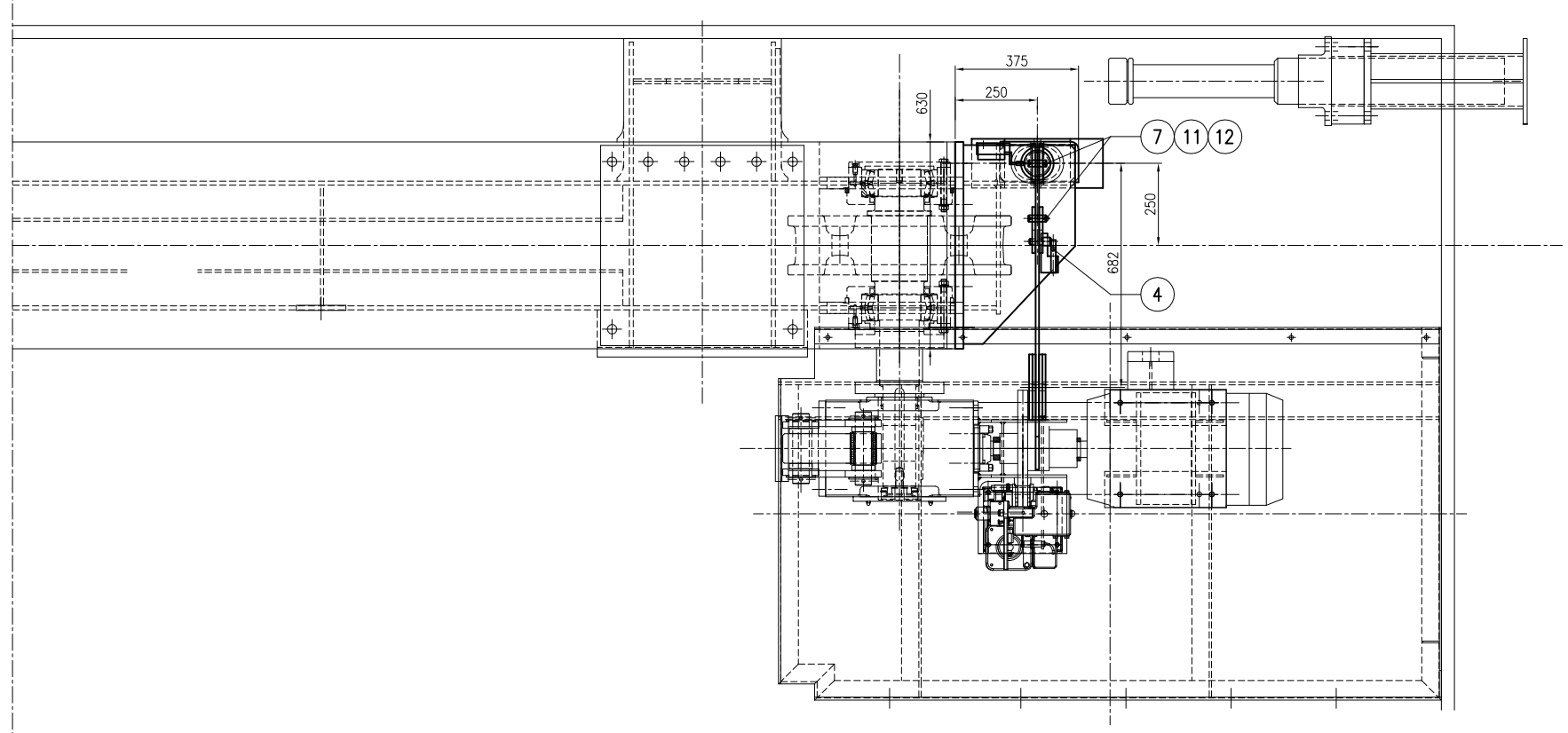

00	24/03/09	FIRST ISSUE					LS	RM
	DATA DATE	MODIFICA ESEGUITA O MOTIVO DELLA SOSTITUZ. MODIFICATION EXECUTED OR REASON OF THE REPLACEMENT					DIS. DRAWER	APP.
Fabb. di riferimento N. Ref. material list	Materiale Material	Trattamento Treatment	Toll. gen. lav. Mach tolerance	Mod. o stampo Type	Peso Weight Kg	Scala Scale		
12834-5650	–	–	H11-d11		SSE M.L.	1:10		

MGM OMG

ROKAS CONSTRUCTIONS S.A.
TEL: +30-2106774400
FAX: +30-2106774401 or 111 WWW.ROKASGROUP.GR

Customer: PIRAEUS PORT AUTHORITY
Object: N.8 RMG 40t
Project: F0010

DIS. DRAWER: LS
VER.
APP.: RM 24/03/09

TIE DOWN TROLLEY ASSEMBLY

Dis. di riferimento N. Ref. Drawing: 12834-5000 | Pos. 47 | 00

Comm. /Job: N. 18033

Disegno / Drawing: N. 12834-5650 | 1/1

Formato: A1