## PLANIMETRY

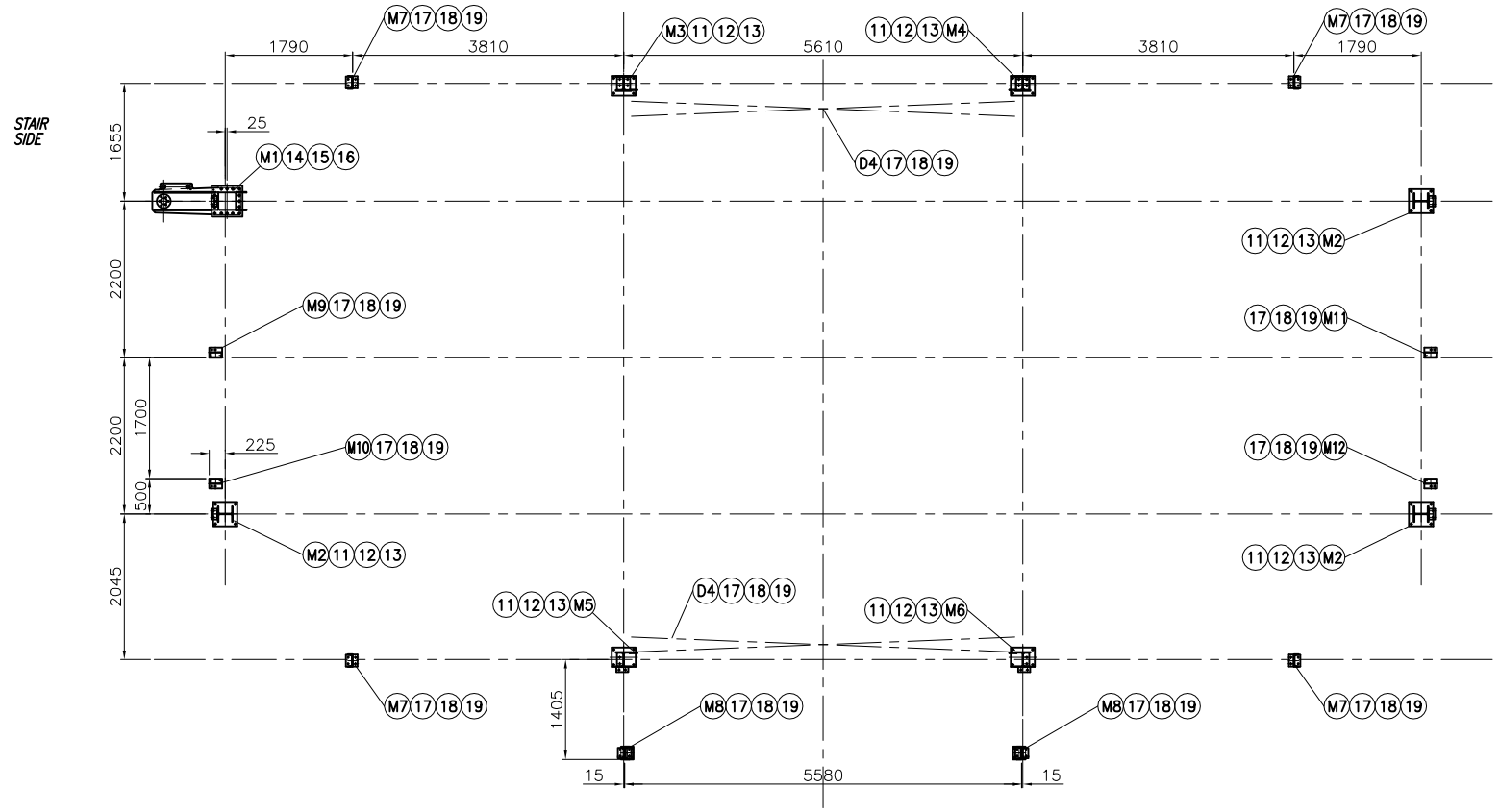


## STRUCTURAL PLAN

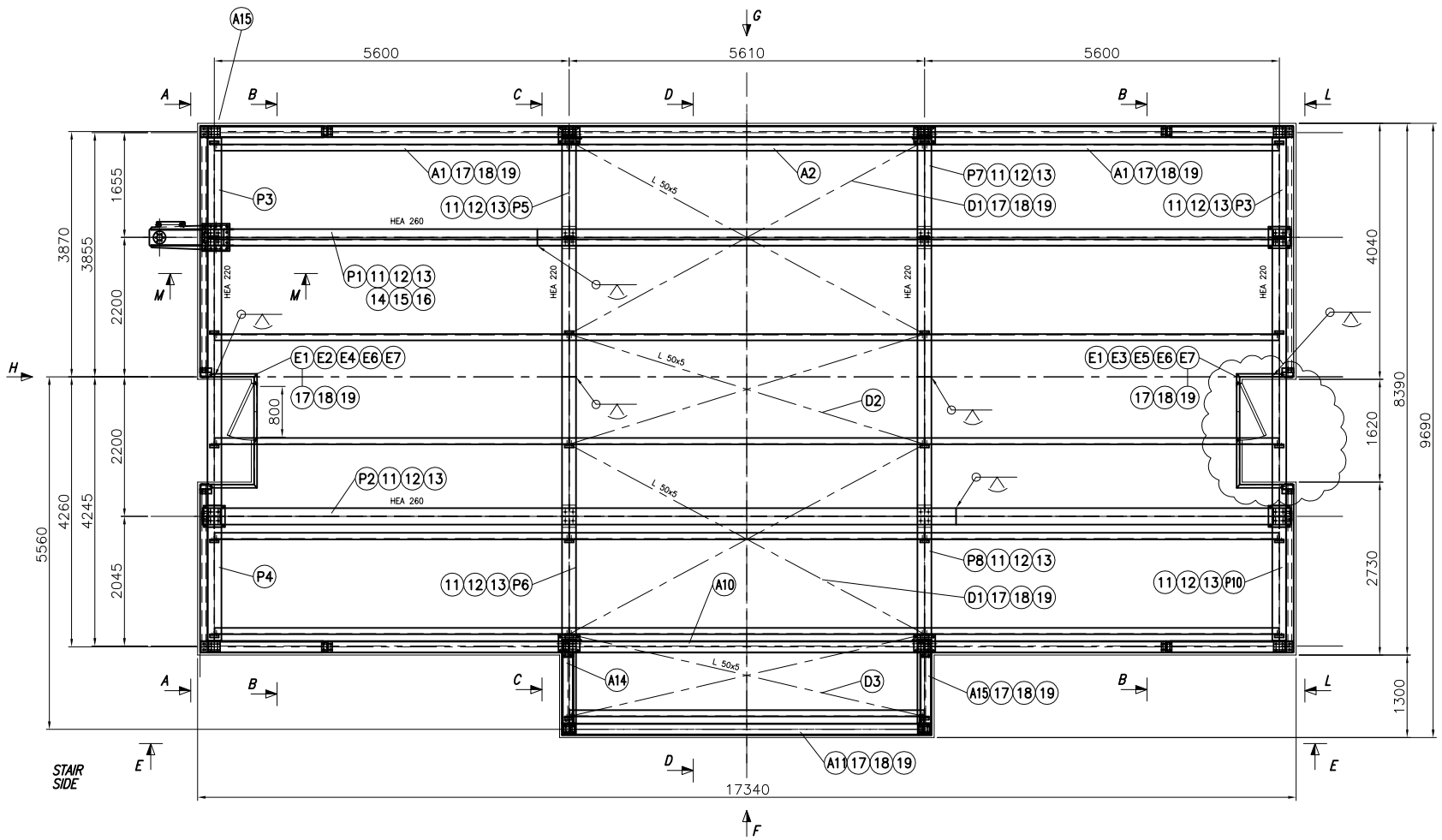


## SECTION A–A (STAIR SIDE) PARTIAL

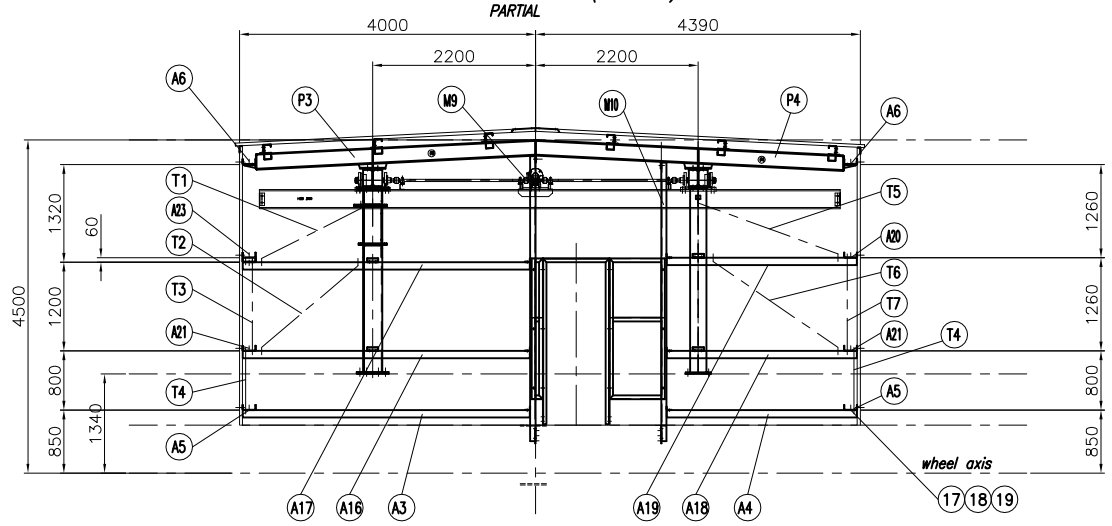


## SECTION B–B PARTIAL

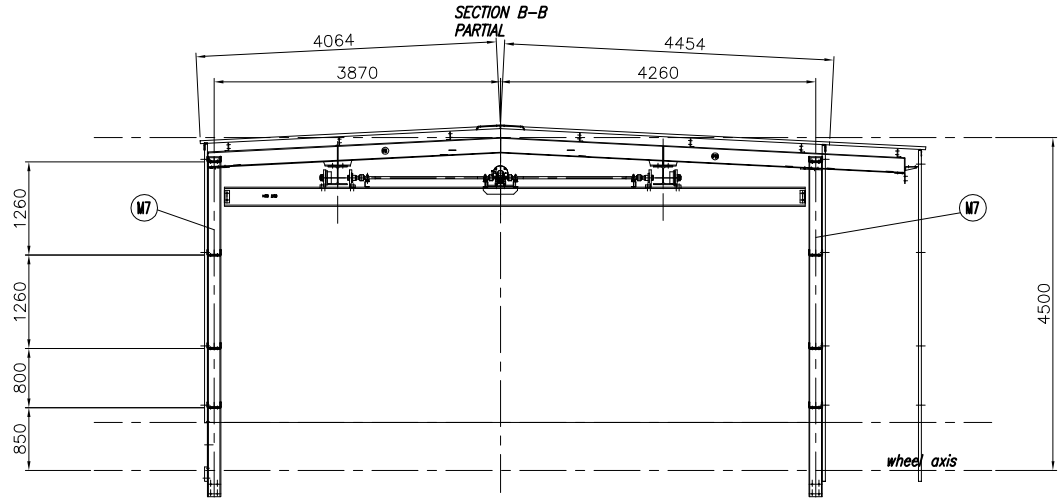


## SECTION L–L PARTIAL

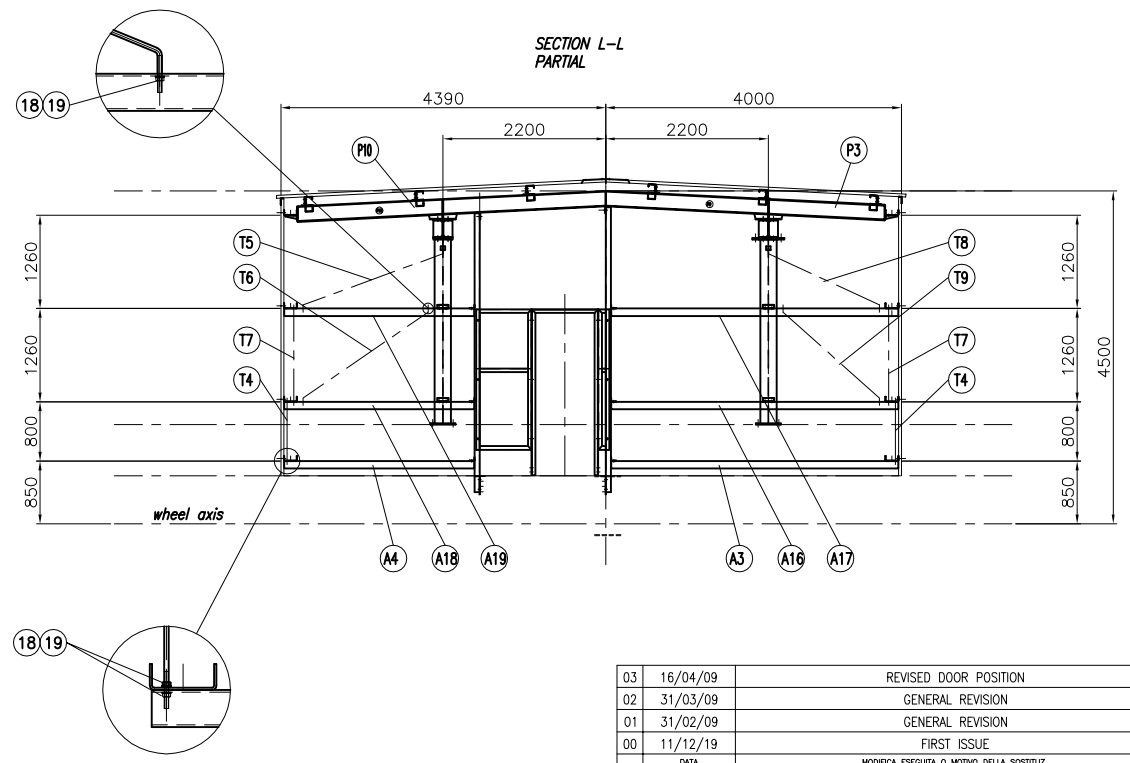


| | | | | |
|---|---|---|---|---|
| 03 | 16/04/09 | REVISED DOOR POSITION | LD | RM |
| 02 | 31/03/09 | GENERAL REVISION | LD | RM |
| 01 | 31/02/09 | GENERAL REVISION | TM | RM |
| 00 | 11/12/19 | FIRST ISSUE | TM | RM |
| | DATA DATE | MODIFICA ESEGUITA O MOTIVO DELLA SOSTITUZ. MODIFICATION EXECUTED OR REASON OF THE REPLACEMENT | DIS. DRAWER | APP. |

| Fabb. di riferimento N. Ref. material list | Materiale Material | Trattamento Treatment | Tol. gen. lav. Mach. tolerance | Mod. o stampo Type | Peso Kg Weight | Scala Scale |
|---|---|---|---|---|---|---|
| 12834–5200 | See Material List | | H11–d11 | | 16518 | 1:50 |

MGM OMG

**ROKAS CONSTRUCTIONS S.A.**
TEL. +30-6946774488
FAX: +30-6946774481 or 111
WWW.ROKASGROUP.GR

Customer: PIRAEUS PORT AUTHORITY
Object: N.8 RMG 40t
Project: F0010

| | | |
|---|---|---|
| DIS. DRAWER | TM | |
| VER. | DB | DATA DATE |
| APP. | RM | 11/12/19 |

| | | | |
|---|---|---|---|
| PIRAEUS PORT AUTHORITY | Dis. di riferimento N. Ref. Drawing: 12834–5000 | Pos. 7 | 00 |
| N.8 RMG 40t SPAN 42500 | Comm. /Job: N. 18133 | Disegno / Drawing: N. 12834–5200 | 1/2 |
| TROLLEY COVER ASSEMBLY | | | 01 02 03 |

Formato: A1