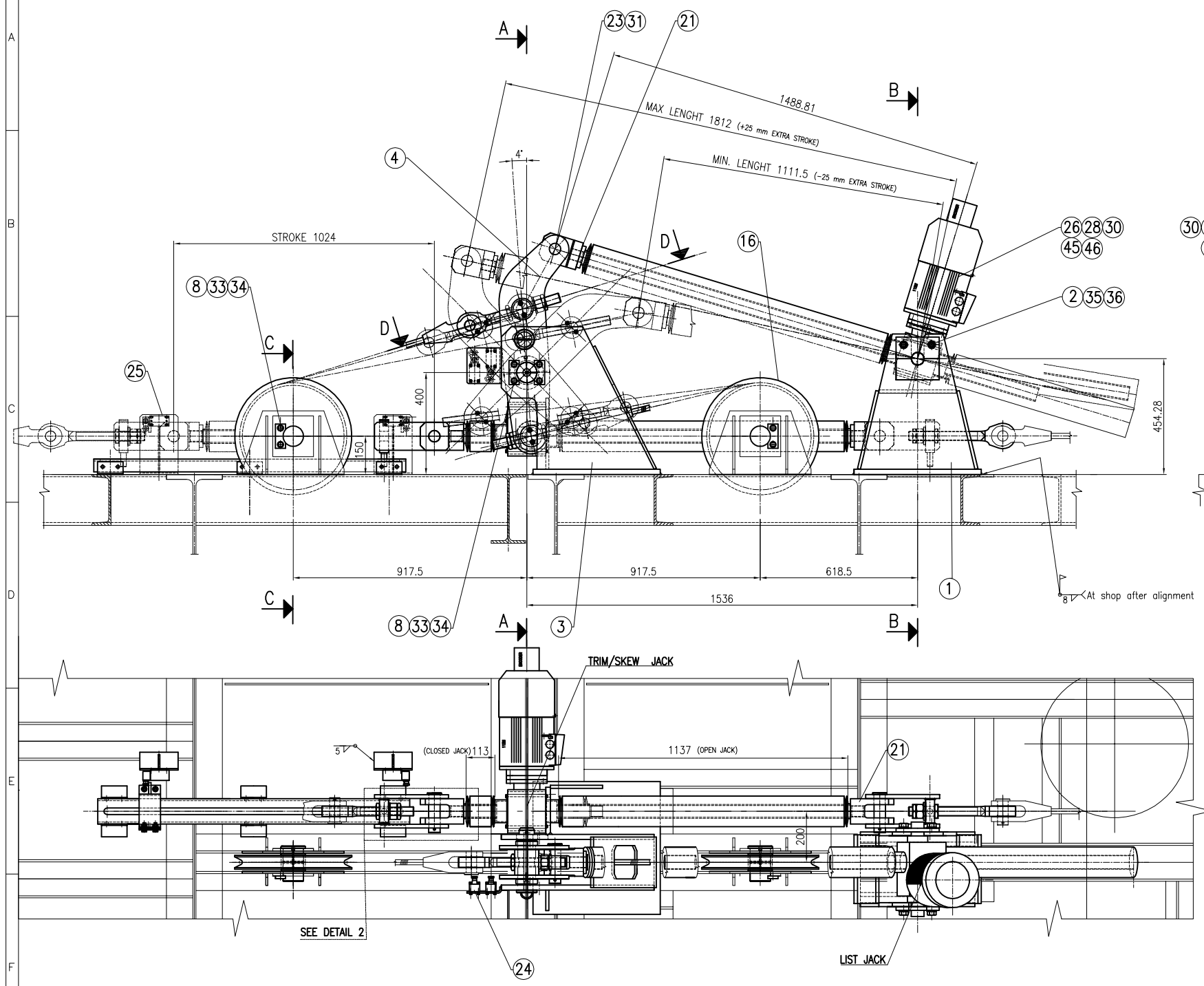

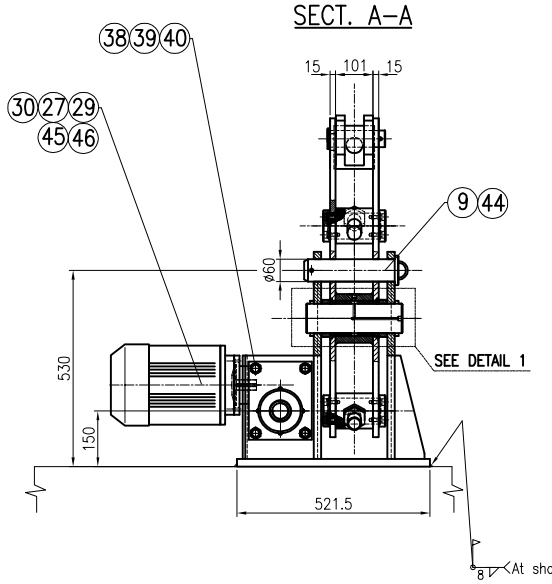

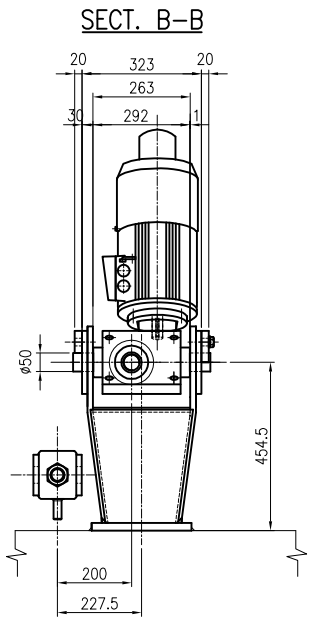

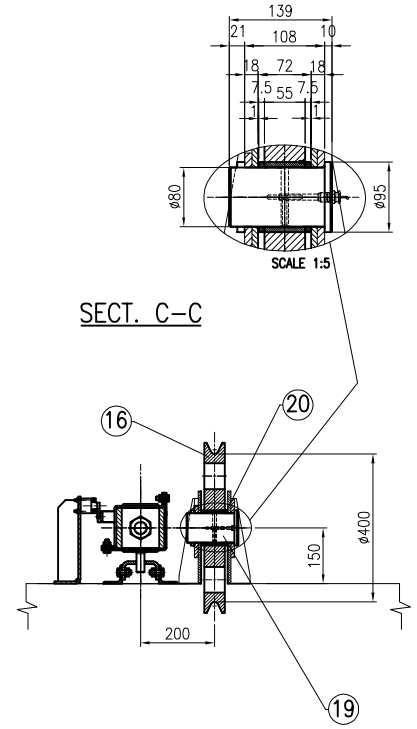

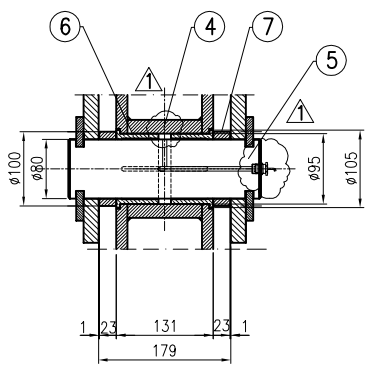

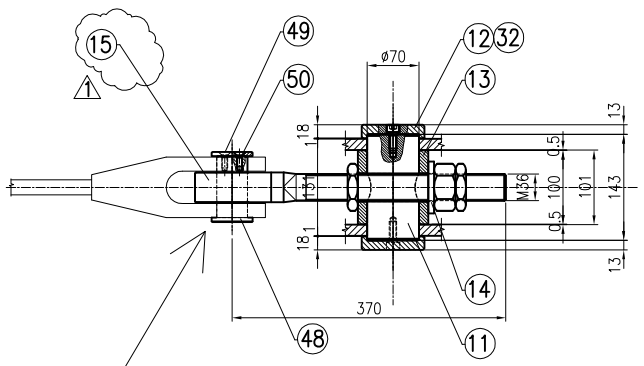

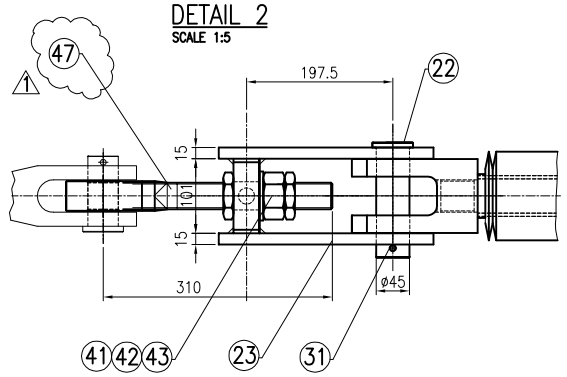

Attention

REMOVE the PIN SUPPLIED WITH THE SOCKET

ASSEMBLY : PIN Pos.48 , COVER Pos.49 , SCREWS Pos.50

DURING the ERECTION

KEY PLAN

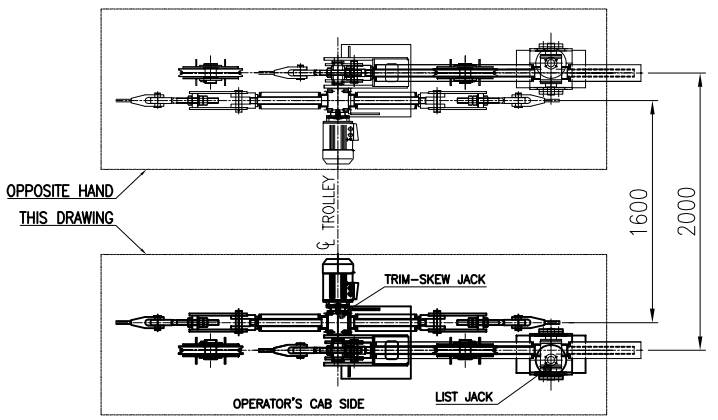

FOR N. 1 CRANE TO MAKE N1 TIME AS DRAWING AND N.1 TIME OPPOSITE HAND

02	03/06/09	ADDED POS.48,49,50	GF	RM
01	14/04/09	REVISION POS.4,5,15, DELETED POS. 37, ADDITION POS.47	LS	RM
	DATA DATE	MODIFICA ESEGUITA O MOTIVO DELLA SOSTITUZ. MODIFICATION EXECUTED OR REASON OF THE REPLACEMENT	DIS. DRAWER	APP.

Fabb. di riferimento N. Ref. material list	Materiale Material	Trattamento Treatment	Tol. gen. lav. Mach tolerance	Mod. o stampo Type	Peso Weight Kg	Scala Scale
12834-5700	SEE M.L.		H11-d11		SEE M.L.	1:10

MGM OMG

ROKAS CONSTRUCTIONS S.A.

TEL. +30-2108774100 FAX +30-2108774121 or 111 WWW.ROKASGROUP.GR

Customer: PIRAEUS PORT AUTHORITY

Object: N.8 RMG 40t

Project: F0010

DIS. DRAWER	S.B.	
VER.	DB	DATA DATE
APP.	GM	26/02/09

PIRAEUS PORT AUTORITY	Dis. di riferimento N. Ref. Drawing 12834-5000	Pos. 20	01
TRIM/LIST/SKEW	Comm. /Job N. 18033	Disegno / Drawing N. 12834-5700 1/1	02
ASSEMBLY			

Formato: A1