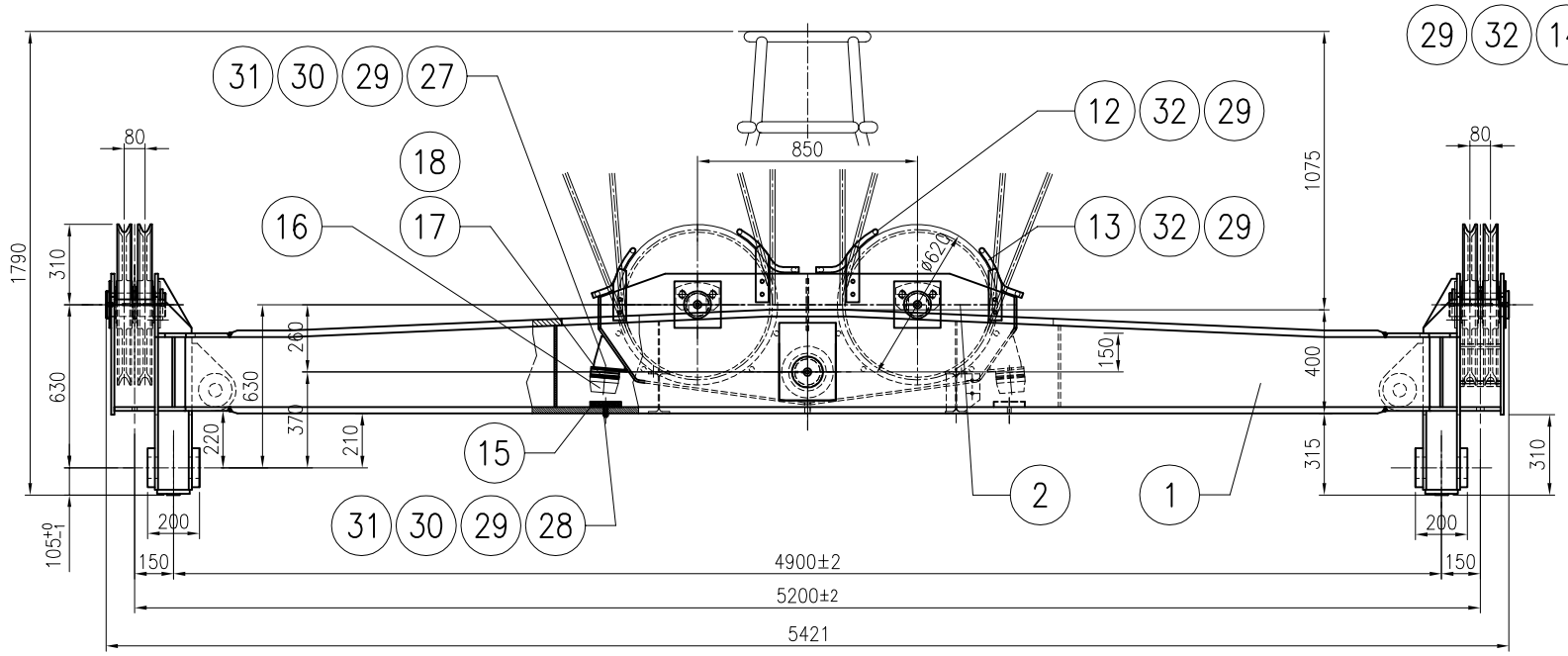

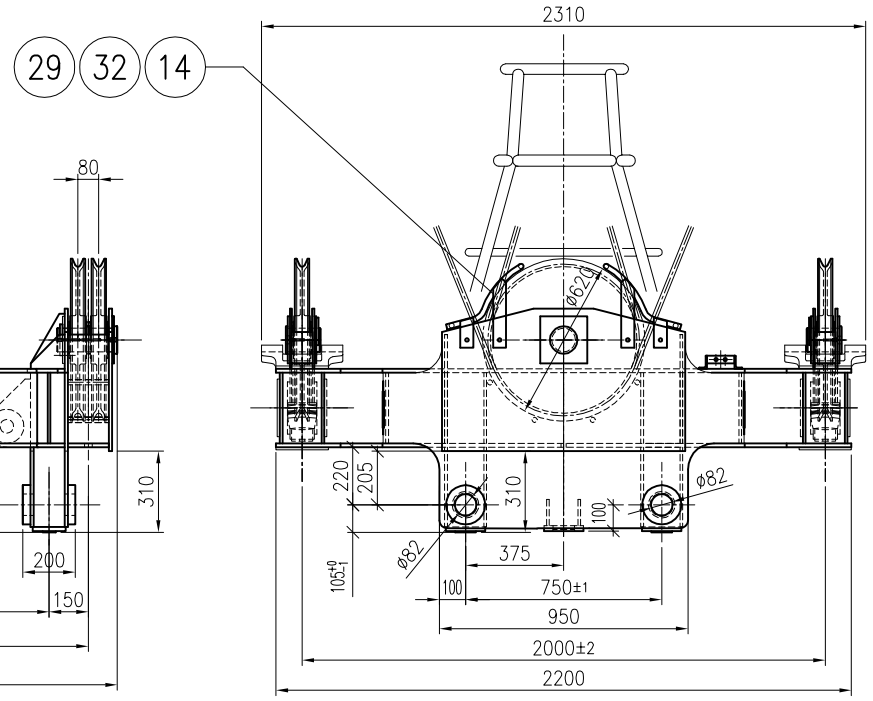

SECTION D–D

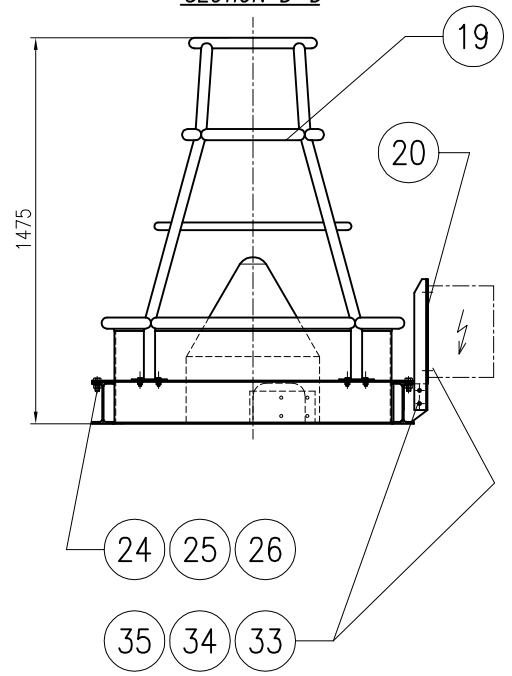

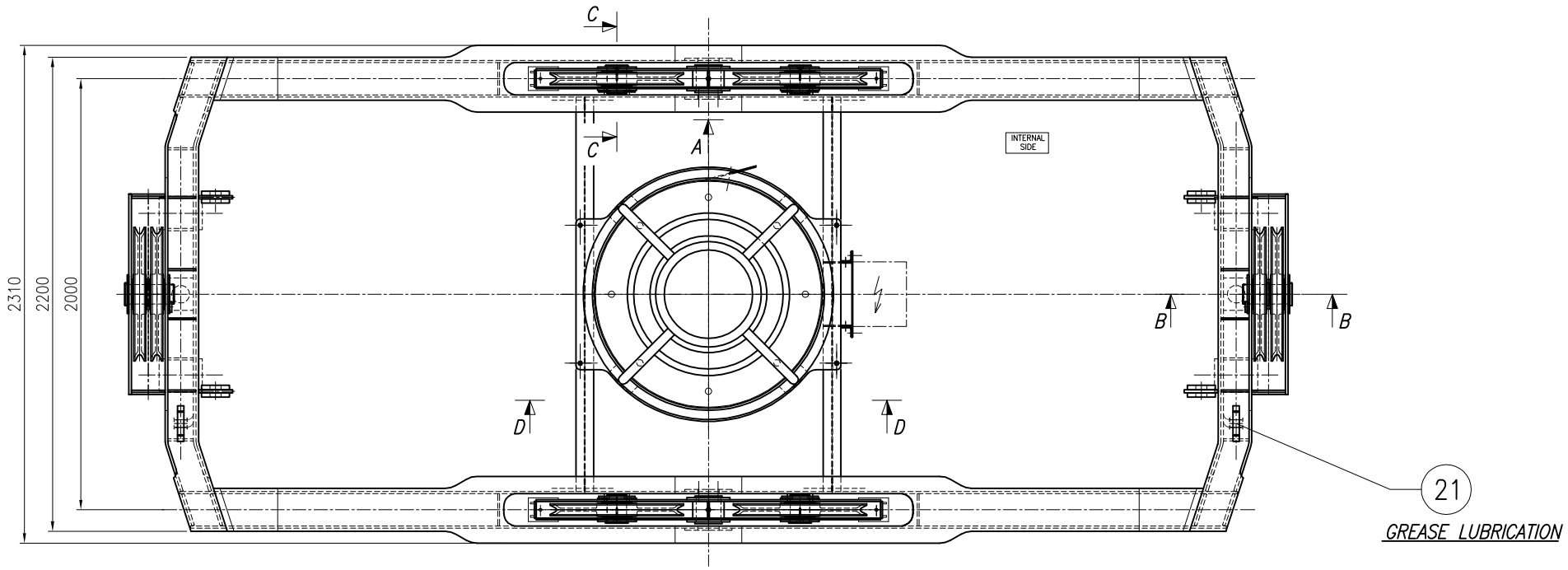

GREASE LUBRICATION

OPERATOR'S CAB SIDE

SECTION B–B

SCALE 1:10
TYPICAL

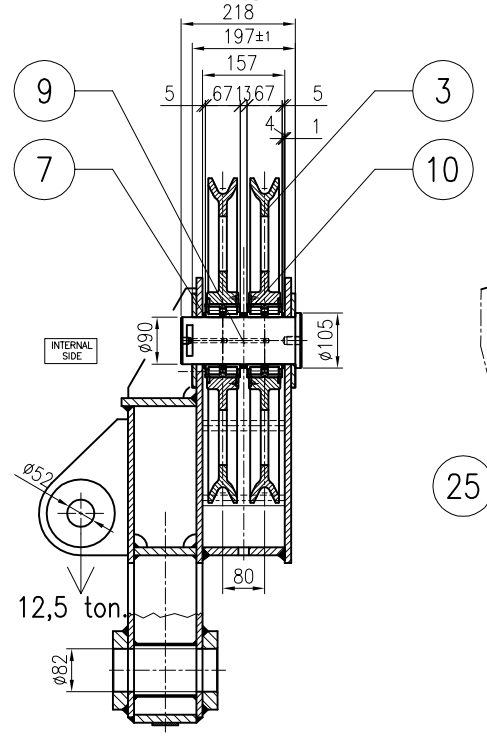

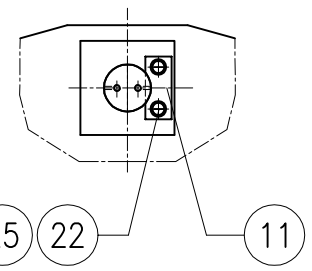

SECTION C–C

SCALE 1:10
TYPICAL

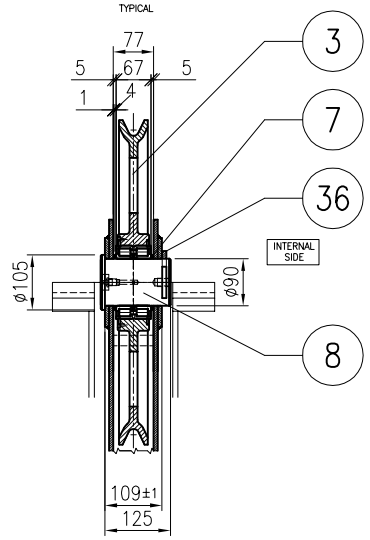

View from "A"

SCALE 1:10
TYPICAL

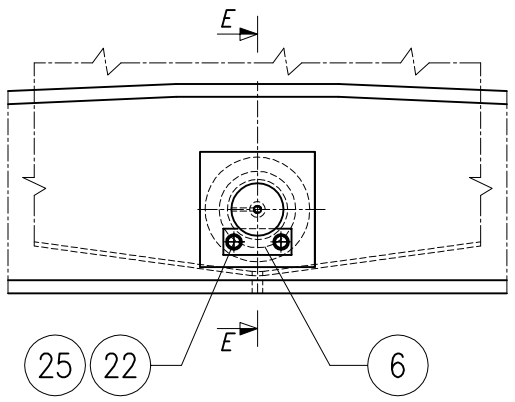

SECTION E–E

SCALE 1:10
TYPICAL

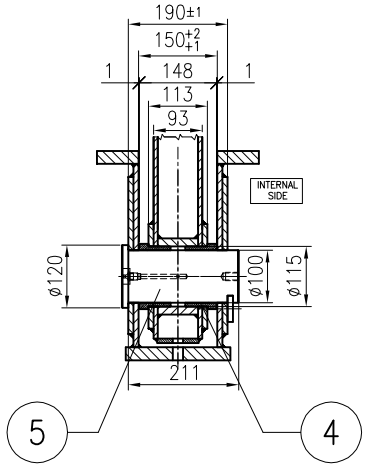

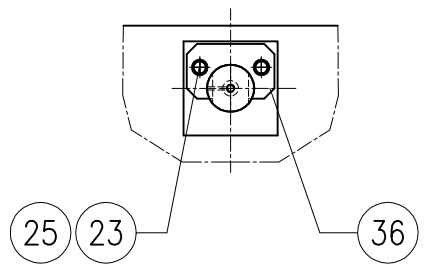

FOR N.1 CRANE MANUFACTURE N.1 PIECE

01	07/05/09	REVISED PINS AND FRAME	GF	EM
00	16/03/09	FIRST ISSUE	GF	RM
	DATA DATE	MODIFICA ESEGUITA O MOTIVO DELLA SOSTITUZ. MODIFICATION EXECUTED OR REASON OF THE REPLACEMENT	DIS. DRAWER	APP.

Fabb. di riferimento N. Ref. material list	Materiale Material	Trattamento Treatment	Toll. gen. lav. Mach tolerance	Mod. o stampo Type	Peso Weight Kg	Scala Scale
12834–7000	See Material List		H11–d11		2920	1:20

MGM OMG

ROKAS CONSTRUCTIONS S.A.
TEL. +30-2108774100
FAX +30-2108774121 or 111 WWW.ROKASGROUP.GR

Customer: *PIRAEUS PORT AUTHORITY*
Object: **N.8 RMG 40t**
Project: **F0010**

DIS. DRAWER	GF	
VER.	DB	DATA DATE
APP.	RM	16/03/09

HEADBLOCK ASSEMBLY

Dis. di riferimento N. Ref. Drawing: 12834–5000 — Pos. 30 — 00 / 01

Comm. /Job: N. 18033 — Disegno / Drawing: N. 12834–7000 — 1/1

Formato: A2