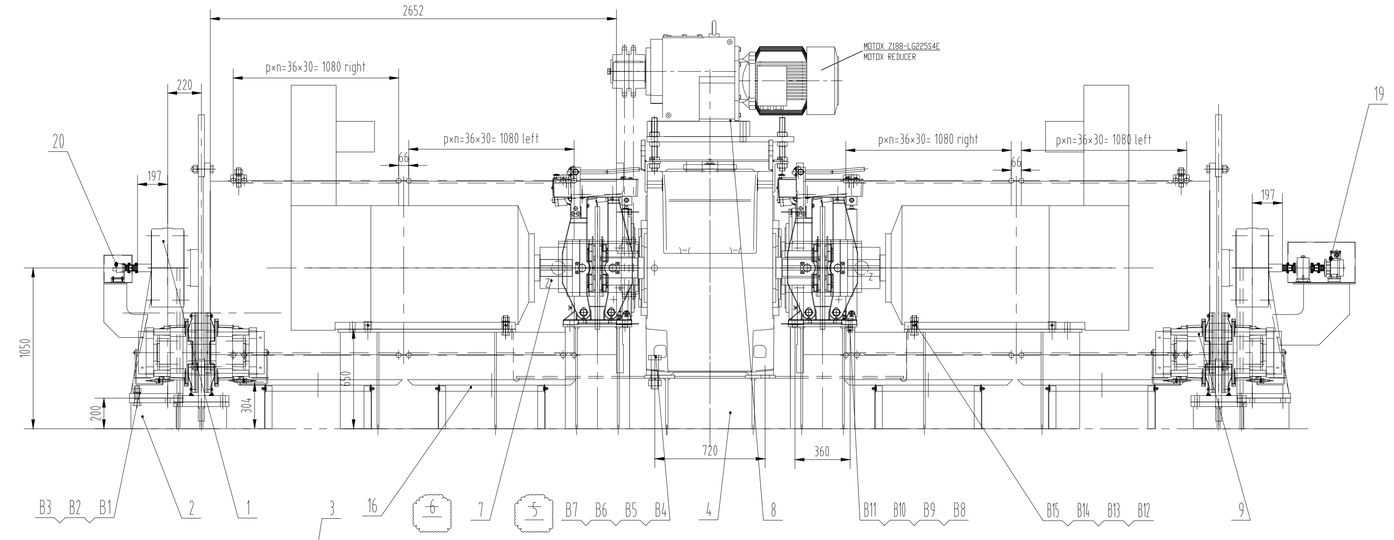

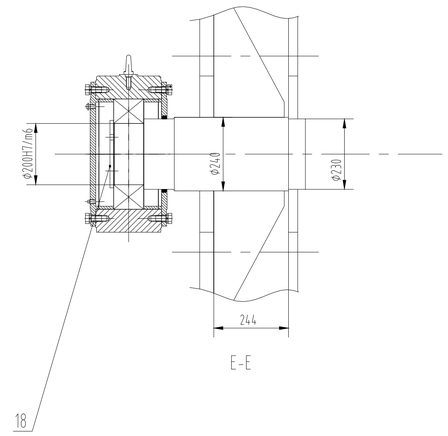

Mechanical Parameter

Hoisting Capacity		65t
Height of Lift		30+10m
Speed	Rated Load	60m/min
	Empty Spreader	120m/min
Motor	Type	M3BP 400LC6
	Power	384KWX2 S1
	Rotate Speed	750-1500r/min
High Speed Brake	Type	USB3-III-ED301/6-800×30
	Disc Dia.	800mm
	Braking Torque	19750 Nm
Emergency Brake	Type	SHI 251-2000×40
	Disc Dia.	2000 mm
	Braking Torque	217440 Nm×2
Reducer	Type	H3SH21
	Ratio	22.368
Drum nominal Dia.		1140 mm

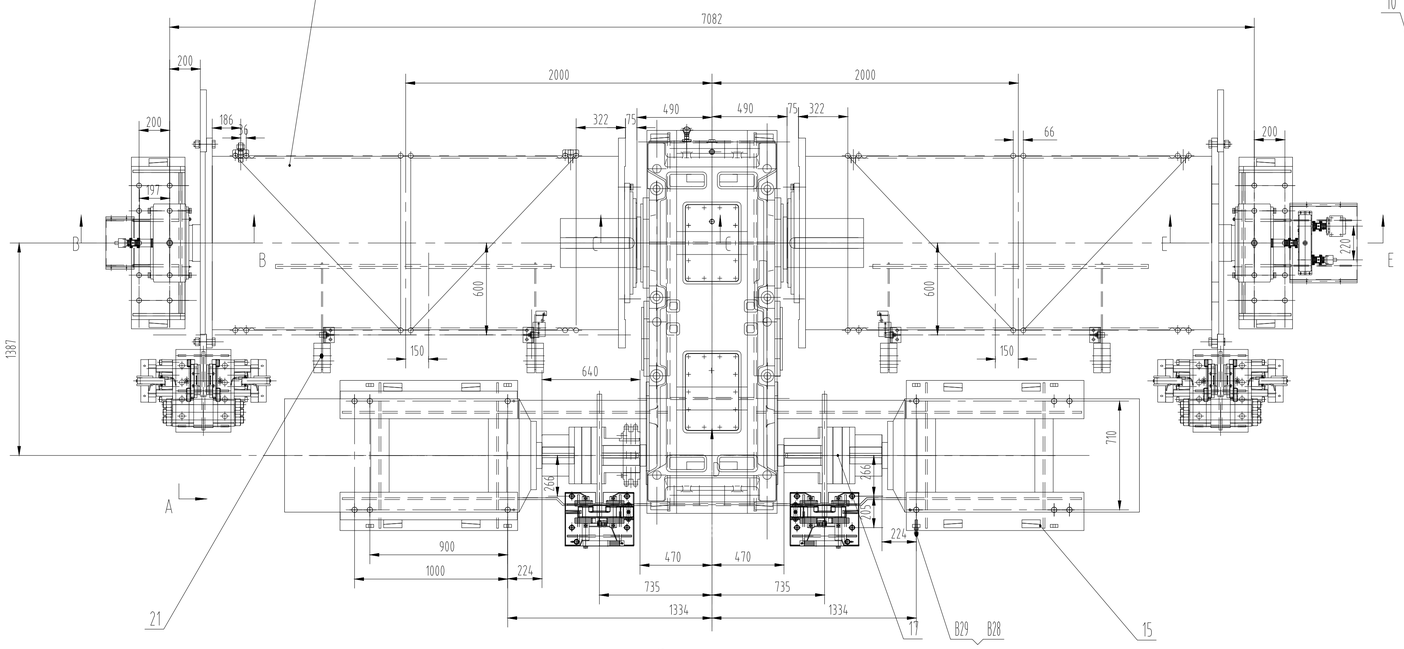

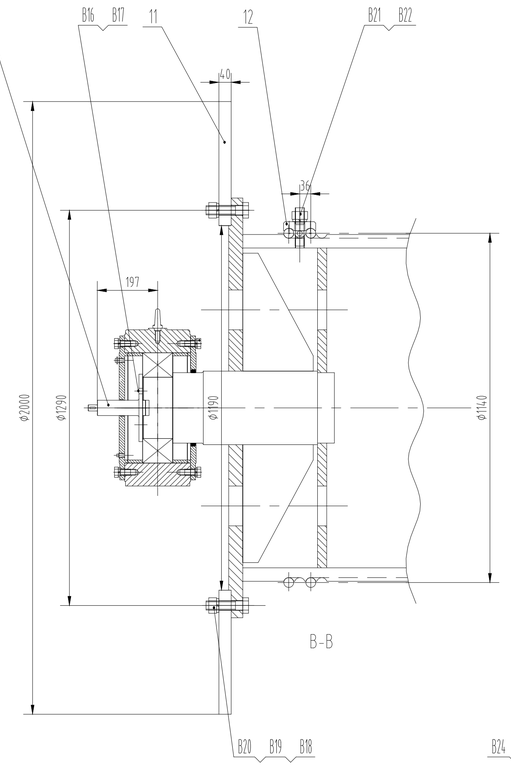

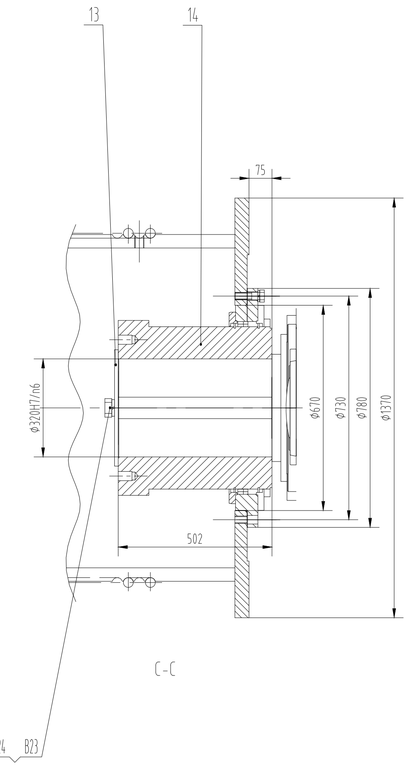

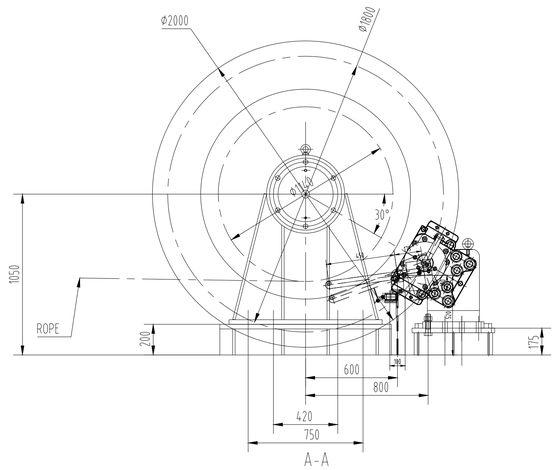

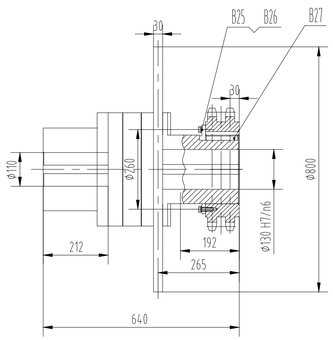

INDEX	DATE	NAME	DESCRIPTION
2	2009-08-25	IKONT	Change the support of gearbox, motor, brake to a public support.
1	2009-07-30	IKONT	Change emergency brake support.

CUSTOMER: P.P.A.

PROJECT: S.T.S. PANAMAX (3 Pcs)

OBJECT: Main Hoist Drive

	DATE	NAME	SIGNATURE	SCALE
DRAWN BY		KONTOGIANNIS		1:20
CHECKED BY		TSITSIRIGOS		
APPROVED		MANIATIS		
MATERIAL	Assembly			
WEIGHT	32945.9			SHEET 1 FROM 1
SAP CODE	0000-M5085.3	SIZE A1		

ROKAS CONSTRUCTIONS S.A.
3, RIZARIOU str.-15233 ATHENS-GREECE
TEL.+30-2108774100 , FAX +30-2108774121 or 111

PROJECT No	GROUP No	DRAWING No	REV
F.0013	1130	M5088	1

REPLACES | REPLACED BY